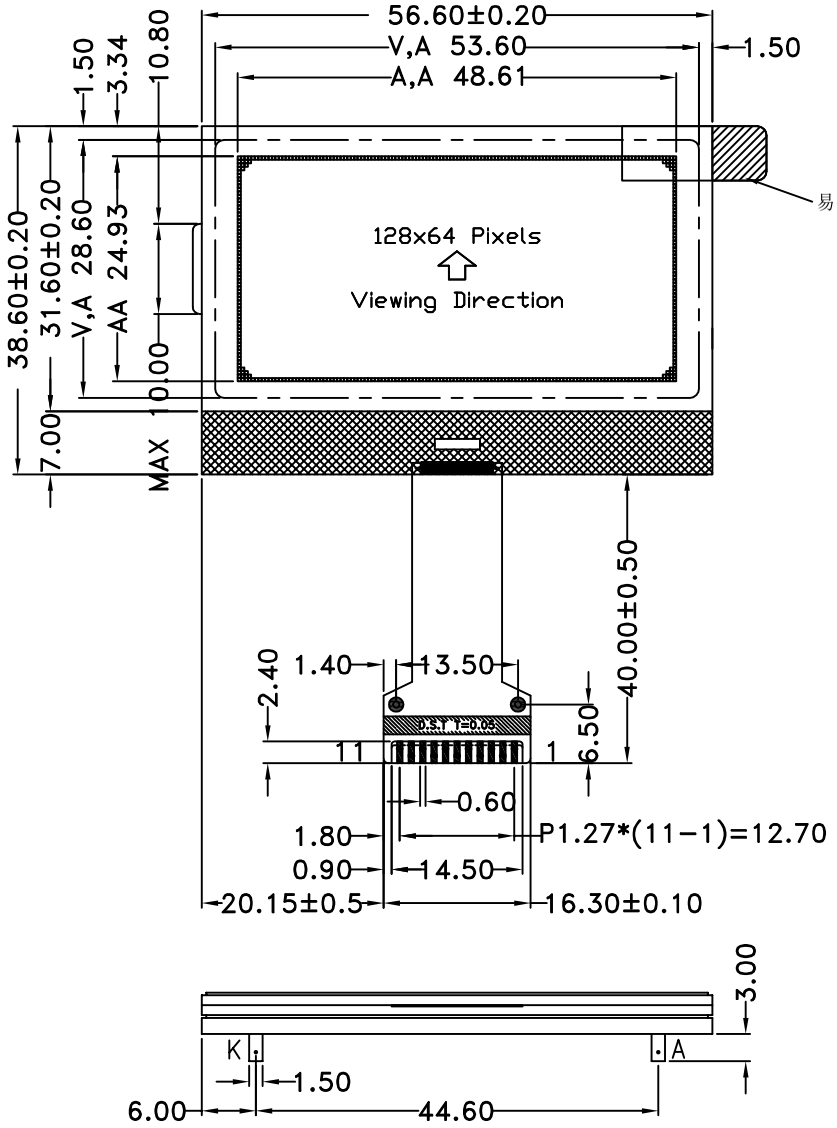

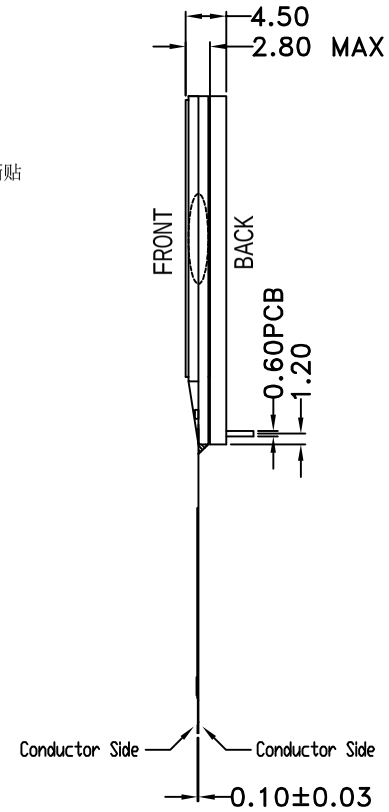

PIN	SYMBOL
1	CS1B
2	/RES
3	A0
4	SCLK
5	SDA
6	NC
7	VDD
8	VSS
9	V0
10	XV0
11	VG

1uF/50V

1uF/50V

Panel Wiring Details
Scale=free

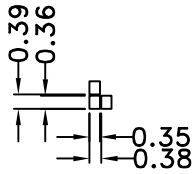

DOT DETAIL
SCALE 5:1

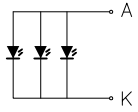

Backlight Circuit
Scale=free

*1. LCD Display Type	STN-YG,Transmissive,Positive		
*2. Viewing Diretion	12H	*6. Storage Temp	-20°C~70°C
*3. LCD Driver Mode	1/64Duty,1/9Bias	*7. Driver IC	ST7567
*4. Operating Voltage	3.3V	*8. Backlight	WHITE Vf=3.1V If=45mA
*5. Operating Temp	-10°C~60°C	*9. RoHS	

HOT DISPLAY

Dwg Title: HTG12864-136-04W-11H12-V02			
EDC No:		Ver: A/0	
Scale 1:1	Unit mm	Tol. ±0.3	
Drawn	Checked	Date: 2025-11-24	