液 晶 模 组 说 明

LCD Module Description

☑初定规格 Preliminary specification

☐正式规格 Official specifications

项目编号 Project No.	TFT-H030A9 V0 Seriess
产品描述 Product Description	TFT LCD Module 360(H) x 640(V) Pixels 3.0 Inch TFT LCD
客 户 确 认 签 章: Signature by customer:	

☐小批量试产 Trial Production ☐大批量生产 Mass Production

请返回一份带有您的签名和评论的确认副本

Please return one copy confirmation with signature and your comments

HotDisplay Technology Co.,Ltd

深圳市鑫洪泰电子科技有限公司

鑫洪泰（东莞）显示技术有限公司

广东省东莞市凤岗镇东深公路凤岗段 208 号天安数码城 N3 栋 3 楼

免责声明

HotDisplay,HOTLCD 和 HOTHMI 是深圳市鑫洪泰电子科技有限公司的商标，HOTHMI 拥有多项专利、商标、商业机密和其它知识产权。

HOTHMI 对公司产品提供可靠性数据(包括数据表)、设计资料(包括参考设计)、应用 或其它设计建议、技术支持和其它资源，但不就本司任何产品用于任何特定目的做出担保。HOTHMI 不承担任何因产品的使用产生责任，包括使用方须遵守的法律法规和安全使用标准。

对于在规格书中提到的产品参数，在不同的应用条件下实际性能可能会产生变化。任何参数的配置和使用必须经由客户的技术支持进行验证，对本文档所涉及的内容进行变更，恕不另行通知。

HOTHMI 对您的使用授权仅限于产品的应用，除此之外不得复制或展示所述资源，HOTHMI 也不提供任何人或第三方机构的知识产权授权许可。如因使用所述资源而产生任何索赔、赔偿、成本、债务及任何损失，HOTHMI 对此概不负责，并且您须赔偿由此对 HOTHMI 造成的损害。

HOTHMI 所提供产品均受 HOTHMI 的销售条款以及 www.hotlcd.com 上或随附 HOTHMI 产品提供的其他可适用条款的约束。HOTHMI 提供所述资源并不扩展或以其他方式更改 HOTHMI 针对 HOTHMI 产品所发布的可适用的担保范围或担保免责声明。

HOTHMI 反对并拒绝您可能提出的任何其他或不同的条款。

Disclaimers

HotDisplay,HOTLCD and HOTHMI are trademarks of Shenzhen Xinhongtai Electronic Technology Co., Ltd. and HOTHMI owns several patents, trademarks, trade secrets and other intellectual property rights.

HOTHMI provides reliability data (including data sheets), design information (including reference designs), application or other design advice, technical support and other resources for the Company's products, but does not warrant the use of any of its products for any particular purpose. HOTHMI assumes no liability arising from the use of its products, including compliance by the user with laws, regulations and standards for safe use.

For the product parameters mentioned in the specification, the actual performance may vary under different application conditions. The configuration and use of any parameter must be verified by the customer's technical support. The content of this document is subject to change without notice.

HOTHMI's license to use you is limited to the application of the product and no other reproduction or display of said resources is permitted, nor does HOTHMI provide a license to the intellectual property of any person or third party organization. HOTHMI shall not be liable for any claims, damages, costs, liabilities and any losses arising out of the use of said resources and you shall indemnify HOTHMI for any damage caused thereby.

HOTHMI offers its products subject to HOTHMI's Terms of Sale and other applicable terms provided on or with HOTHMI products at www.hotlcd.com. HOTHMI provides the resources described and does not extend or otherwise modify the scope of applicable warranties or warranty disclaimers issued by HOTHMI with respect to HOTHMI products.

HOTHMI objects to and rejects any other or different terms that you may offer.

内容
substance

一、基本特征 General Feature·····4
二、外形尺寸 Outline Dimensions·····5
三、引脚说明 Pin Description·····6
四、电气特性 Electrical Characteristics·····11
五、液晶光学规格 TFT OPTICAL SPECIFICATION·····15
六、驱动器交流特性 Driver AC characteristic·····17
七、接口 Interface·····22
八、可靠性测试 RELIABILITY TEST·····31
九、处理和注意事项 HANDDLING & CAUTIONS·····33
十、初始化代码 Initialization code·····35

一、基本特征 General Feature:

项目 Item	标准值 Standard Value			单位 Unit
TFT 显示尺寸 TFT Display Size	3.0_a-Si TFT_RGB Vertical Stripe			英寸 Inch
TFT 分辨率 TFT Number of Pixels	360(H) x 640 (V)			像素 Pixel
TFT 显示有效区域 TFT Display Active Area	36.72 (H) x 65.28 (V)			毫米 mm
液晶模组外形尺寸 LCD Module Dimensions	42.70(H) x 74.70(V) x 2.25(D) <TFT>			毫米 mm
液晶模组观看方向角度 Viewing direction of LCD module	U80° D80° R80° L80° (Typ.)			度数 Deg.
液晶模组接口 LCD Module Interfaces	TFT	Support: 16/18/24 RGB Interface (Sync and DE mode)		-
	CTP	-		
液晶模组芯片 LCD Module Driver IC	TFT	ST7701S <TaiWan, China>		-
	CTP	-		
触摸屏 Touch Panel	☑不带触摸屏 No TP	☐带电容触摸 Have CTP	☐带电阻触摸 Have RTP	-
TFT 模组重量 TFT Module Weight	不带触摸屏 Without TP	T.B.D ±5%		克 g
	带电容触摸屏 With CTP	T.B.D ±5%		
	带电阻触摸屏 With RTP	T.B.D ±5%		

说明 Description:

二、外形尺寸 Outline Dimensions

TFT-H030A9NHIST7N40_V0-1 <No TP_700cd/m2_SPI+RGB 接口>

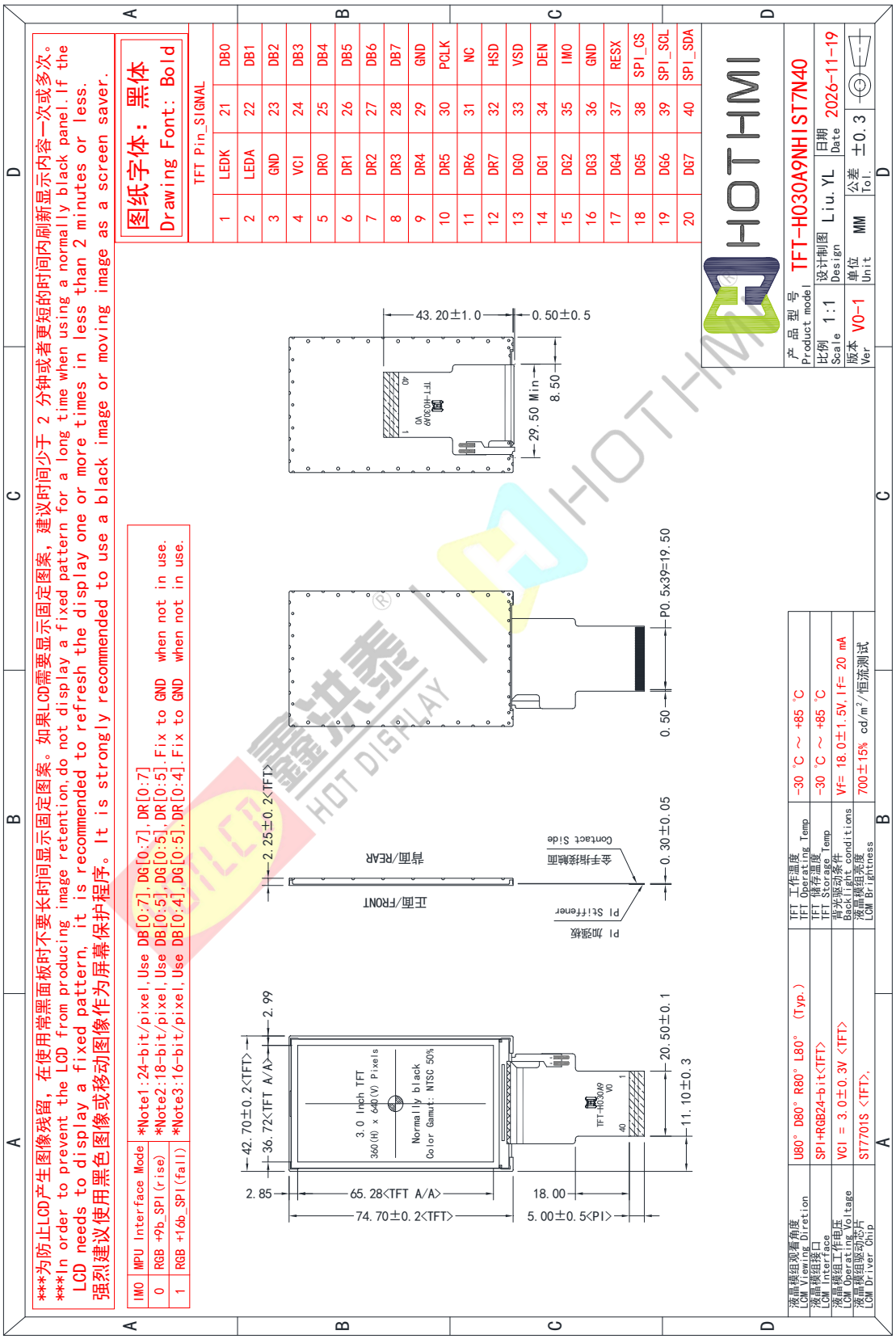

www.hotlcd.com 优质源于专业 EXCELLENT QUALITY BASED ON PROFESSION

三、引脚说明 Pin Description

3.1 模组引脚说明 TFT Pin Description

引脚编号 Pin NO.	标号Symbol	详细描述 Description
1	LEDK	LED阴极 LED cathode
2	LEDA	LED阳极 LED anode
3	GND	电源地 Power supply ground
4	VCI	电源 Power supply
5～12	DR0～7	红色数据总线，不使用的建议连接到GND。 Red data bus,It is recommended to connect to GND if not in use.
13～20	DG0～7	绿色数据总线，不使用的建议连接到GND。 Green data bus,It is recommended to connect to GND if not in use.
21～28	DB0～7	蓝色数据总线，不使用的建议连接到GND。 Blue data bus,It is recommended to connect to GND if not in use.
29	GND	电源地 Power supply ground
30	PCLK	像素时钟输入引脚，数据在PCLK的正边缘输入 Pixel clock input pin, The data is input on the positive edge of PCLK
31	NC	不连接。 Not connected。
32	HSD	水平同步信号，低有效。 Horizontal sync signal,Low active.
33	VSD	垂直同步信号，低有效。 Vertical sync signal,Low active.
34	DEN	数据输入启用，低有效。 Data input enable,Low active.
35	IMO	系统界面模式选择 The System interface mode select。 IMO="GND"：RGB+9b_SPI(rise)（most commonly used） IMO="VCI"：RGB+16b_SPI(fall)
- 下一页 - -Next page -		

引脚编号 Pin NO.	标号Symbol	详细描述 Description
36	GND	电源地 Power supply ground
37	RESX	全局复位引脚，低电平进入复位状态。 Global reset pin. Active Low to enter Reset State.
38	SPI-CS	初始化芯片选择信号，低电平有效 Initialize chip selection signal, active low
39	SPI-SCL	SPI接口的串行时钟输入 Serial clock input for SPI interface
40	SPI-SDA	SPI接口串行数据输入/输出双向引脚 Serial data input/output bidirectional pin for SPI Interface
- 结束 - - END -		

温馨提示 1:建议将“Pin35”连接到 I/O 控制,并在未来的升级中将其替换为“RESX”。“Pin37-40”将用作触针。MCU 内置初始化代码，不需要 SPI 下载

Kind reminder1: Suggest connecting 'Pin35' to the I/O control and replacing it with 'RESX' in future upgrades. Pin37-40 will be used as a touch pin, MCU built-in initialization code, no SPI download required

3.2 CTP 引脚说明 CTP Pin Description

引脚编号 Pin NO.	标号 Symbol	详细描述 Description
1	-	-
2	-	-
3	-	-
4	-	-
5	-	-
6	-	-
- 结束 - - END -		

3.3 接口参考电路图 Interface Reference Circuit Diagram

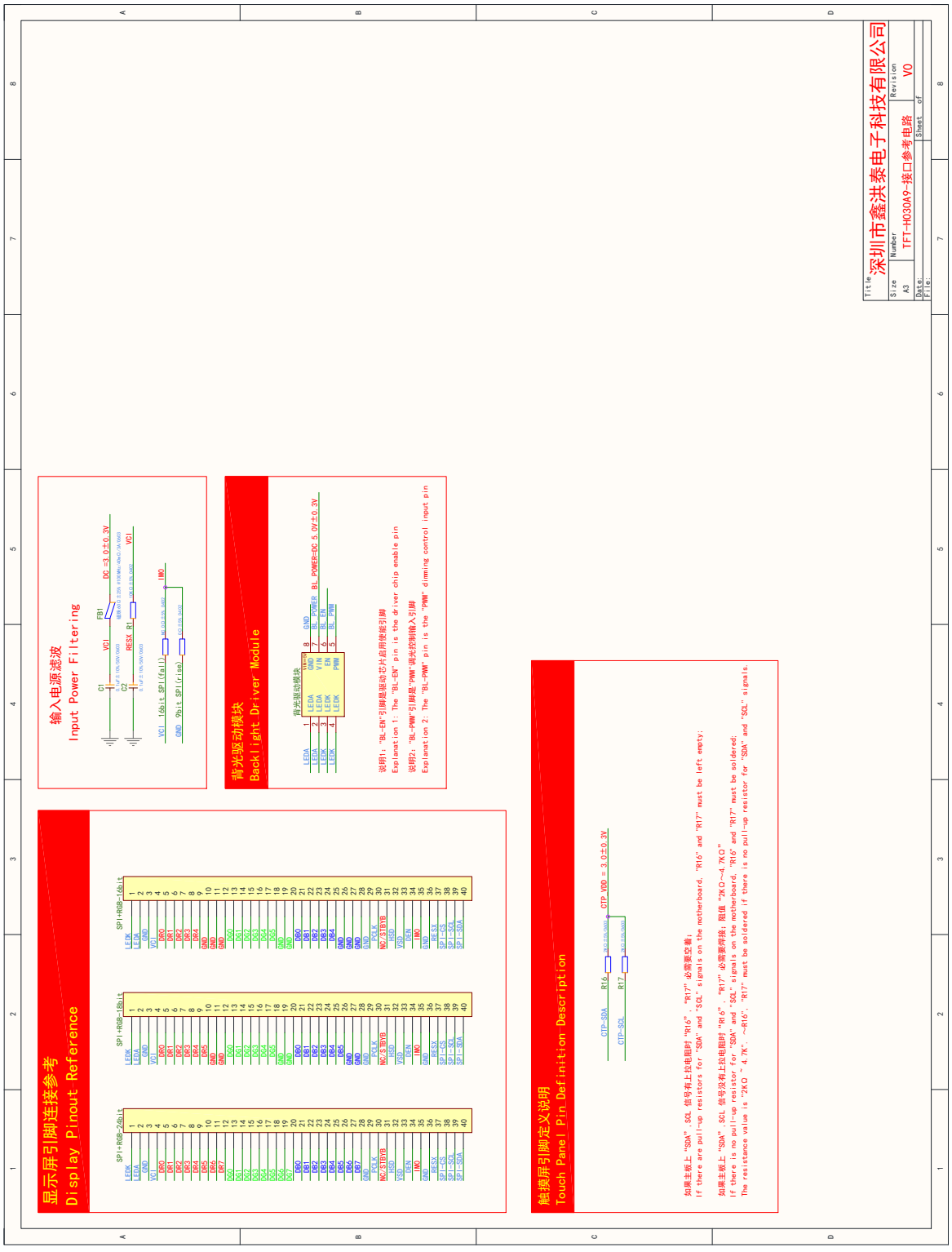

温馨提示：我司能够提供配套的背光驱动模块和“AVDD”升压模块

Kind reminder: Our company can provide supporting backlight driver modules and "AVDD" boost modules

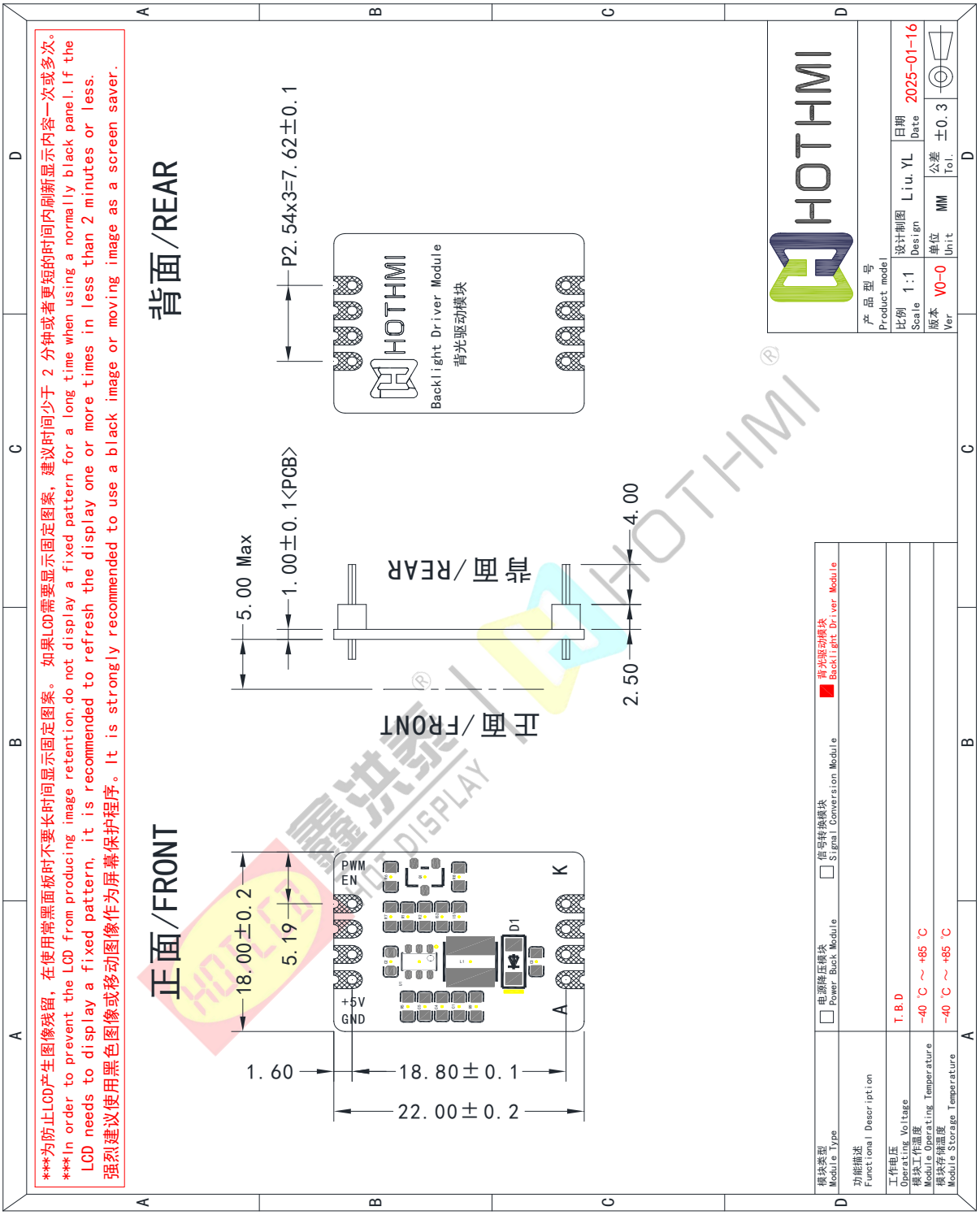

背光模块尺寸

Backlight Module Dimensions

温馨提示：我司所有背光模块长，宽尺寸相同，引脚定义相同。使用的模块以实物为准.

Kind reminder: All of our backlight modules have the same length and width dimensions and the same pin definition.Modules used are subject to physical.

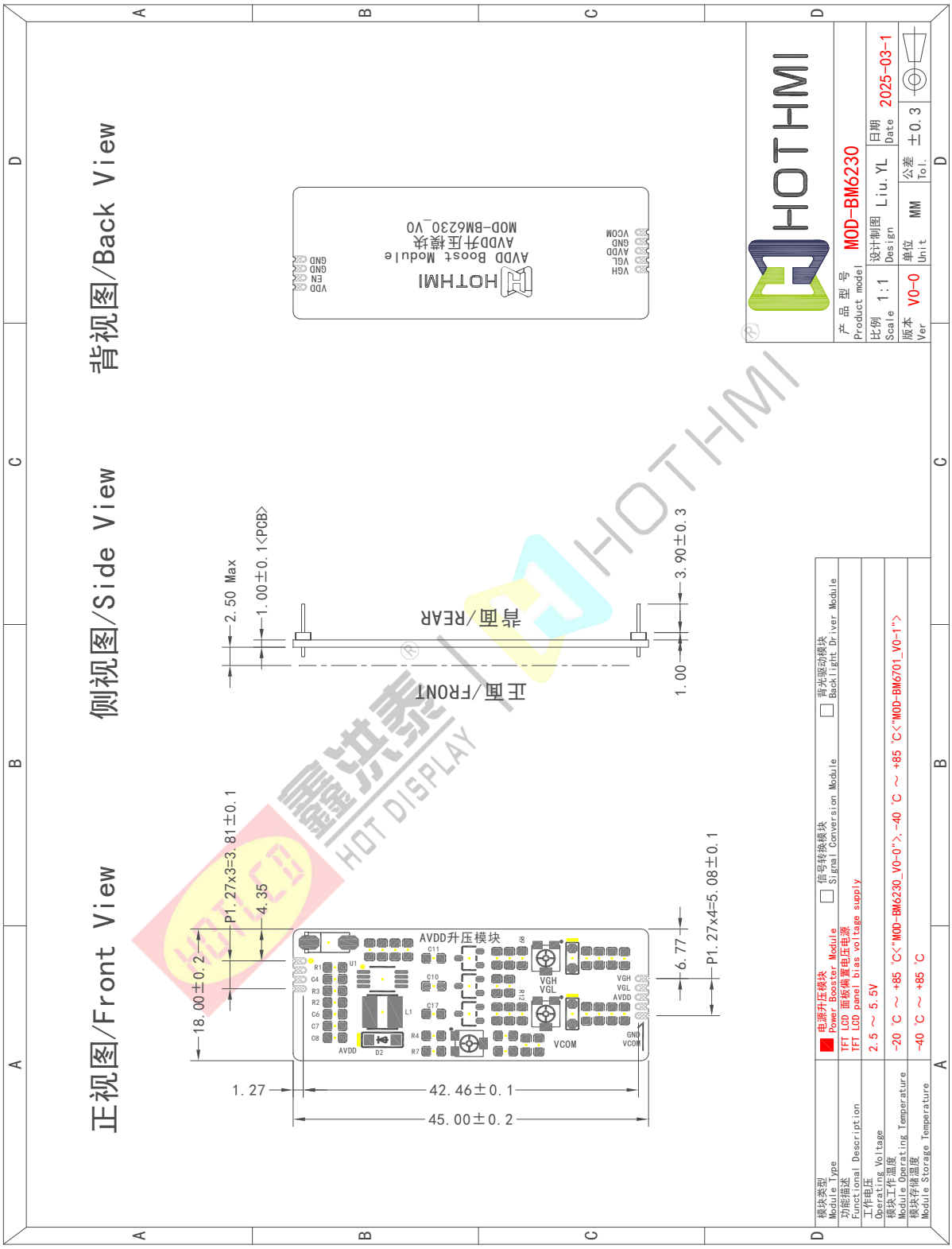

AVDD 升压模块尺寸

AVDD Boost Module Dimensions

www.hotlcd.com 优质源于专业 EXCELLENT QUALITY BASED ON PROFESSION

四、电气特性 Electrical Characteristics

4-1 TFT 面板工作条件 TFT Panel Operating Conditions

项目 Item	标号 Symbol	条件 Condition	最小值 Min	典型值 Type	最大值 Max	单位 Unit
数字电源 Digital Power	VCI	-	Type -0.3	3.0	Type +0.3	伏 V
接口工作电压 IO Supply Voltage	IOVCC	-	Type -0.1	-	Type +0.1	伏 V
模拟电路电源 Power For Analog	AVDD	-	Type -0.3	-	Type +0.3	伏 V
TFT 栅极导通电压 TFT Gate ON Voltage	VGH	-	Type -1.0	-	Type +1.0	伏 V
TFT 栅极关断电压 TFT Gate OFF Voltage	VGL	-	Type -1.0	-	Type +1.0	伏 V
TFT 公共电极电压 TFT Common Electrode Voltage	VCOM	-	Type -0.5	-	Type +0.5	伏 V
工作电流 Operation Current	Ioc	VCI=3.3V	35	-	40	毫安 mA
		IOVCC=1.8V	-	-	-	
待机电流 Standby Current	Isc	STBYB=L	-	-	-	毫安 mA
TFT 工作温度 TFT Operating Temp	TOPR	-	-30	+25	+85	摄氏度 ℃
TFT 储存温度 TFT Storage Temp	TSTG	-	-30	+25	+85	摄氏度 ℃

温馨提示

1. 电流数据采用 85C1 指针式电流表测量，仅供参考。
2. 必须调节 Vcom 以优化显示质量，如串扰和对比度等。
3. 我们只是建议将设定电压作为参考值。为了获得最佳的显示质量，应根据客户的开发情况改变设定电压。（显示质量可能会因客户的电压设置而改变。）。

Kind reminder:

1. The current data is measured using an 85C1 pointer ammeter, for reference only.
2. Vcom must be adjusted to optimize display quality,as Crosstalk and Contrast Ratio etc.
3. We just kindly recommend the setting-voltages the reference value. In order to get the optimized display quality, the setting-voltage should be changed according to customer"s developing condition. (The display quality could be changed by customer"s setting -voltage.)

4-2 背光工作条件 LED back light specification

4-2-1：Backlight-1

项目 Item	标号 Symbol	条件 Condition	最小值 Min	典型值 Type	最大值 Max	单位 Unit
工作电压 Forward voltage	VF	恒流 constant current	Type -1.5	18.0	Type +1.5	伏特 V
工作电流 Forward current	IF		-	20	Type +25%	毫安 mA
亮度（带 LCD） Luminance (With LCD)	Lv (if=Type)	不带触摸 No TP	Type -15%	700	Type +15%	坎德拉/平方米 cd/m^2
		带电阻触摸 Have RTP		-		
		带电容触摸 Have CTP		-		
LED 寿命 LED life time	Hr	Ta=25±3 ℃	20,000	30,000	-	小时 Hour



不带触摸 No TP　　带电阻触摸 Have RTP　　带电容触摸 Have CTP

注释 Note:

1. LED 寿命（Hr）定义为在 Ta=25±3 ℃,上表所示的典型电压电流值条件下持续工作直至亮度低于 50% 的时间。

LED life time (Hr) can be defined as the time in which it continues to operate under the condition:Ta=25±3 ℃, typical IL value indicated in the above table until the brightness becomes less than 50%.

2. 以上结果是按 MTBF 計算方式预估判定的 LED 失效时间，实际测试 LED 在 Ta=25±3 ℃点亮 5000H，亮度衰减 8%.

The above results are estimated and judged by the MTBF calculation method of the LED failure time. The actual test LED is lit for 5000H at Ta=25±3 ℃, and the brightness decays by 8%.

4-2-2：Backlight-2

项目 Item	标号 Symbol	条件 Condition	最小值 Min	典型值 Type	最大值 Max	单位 Unit
工作电压 Forward voltage	VF	恒流 constant current	Type -1.0	-	Type +1.0	伏特 V
工作电流 Forward current	IF		-	-	-	毫安 mA
亮度（带 LCD） Luminance (With LCD)	Lv	不带触摸 Without TP	Type -15%	-	Type +15	坎德拉/平方米 cd/m^2
		带电容触摸 Have CTP		-		
		带玻璃盖板 Have CG		-		
LED 寿命 LED life time	Hr	Ta=25±3 ℃	20,000	30,000	-	小时 Hour



不带触摸
No TP



带电容触摸（框贴）
Have CTP（Frame paste）



带玻璃盖板
Have Cover Glass

注释 Note:

3. LED 寿命（Hr）定义为在 Ta=25±3 ℃,上表所示的典型电压电流值条件下持续工作直至亮度低于 50% 的时间。

LED life time (Hr) can be defined as the time in which it continues to operate under the condition:Ta=25±3 ℃, typical IL value indicated in the above table until the brightness becomes less than 50%.

4. 以上结果是按 MTBF 計算方式预估判定的 LED 失效时间，实际测试 LED 在 Ta=25±3 ℃点亮 5000H，亮度衰减 8%.

The above results are estimated and judged by the MTBF calculation method of the LED failure time. The actual test LED is lit for 5000H at Ta=25±3 ℃, and the brightness decays by 8%.

4-3 电容触摸屏工作条件 CTP Operating Conditions

项目 Item	标号 Symbol	条件 Condition	最小值 Min	典型值 Type	最大值 Max	单位 Unit
表面硬度 Surface hardness	-	铅笔 Pencil	-	6H	-	硬度 Hard
最大点数 maximum point number	-	-	-	-	-	手指 Fingers
坐标原点 origin	-	-	-			位置 Position
X 分辨率 X resolution	-	-	-			-
Y 分辨率 Y resolution	-	-	-			-
透光率 Transmittance	-	-	80	-	-	百分比 %
USB 5V 输入电源 USB 5V input power	VDD5V	-	Type -0.3	-	Type +0.3	伏特 V
数字电源 Digital Power	VDD	-	Type -0.3	3.0	Type +0.3	伏特 V
I/O 电源 I/O Power	IOVDD	-	Type -0.3	-	Type +0.3	伏特 V
工作温度 Operation Temperature	-	20%-90%RH;	-20	+25	+70	摄氏度 ℃
储存温度 Storage Temperature	-		-30	+25	+80	摄氏度 ℃

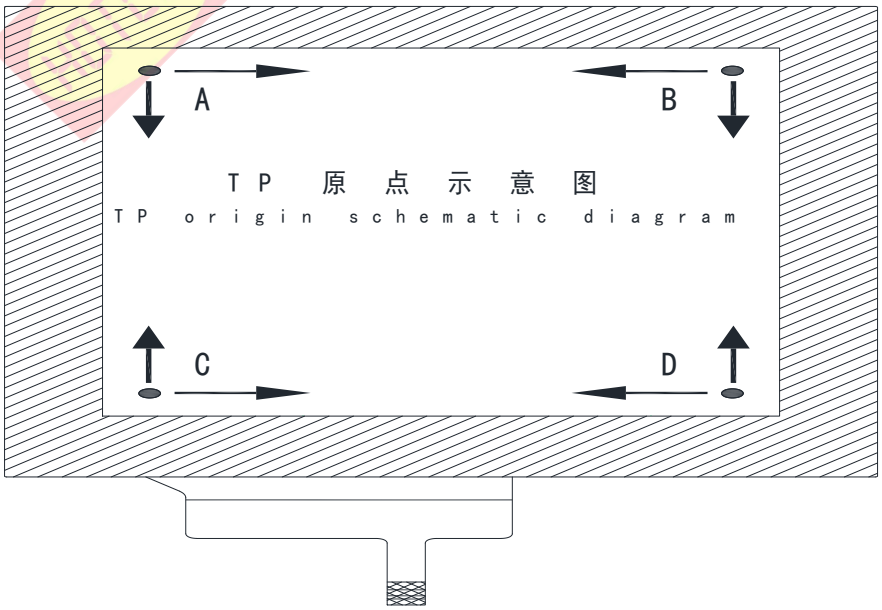

五、液晶光学规格 TFT OPTICAL SPECIFICATION

光学规格的测试应在暗室（环境亮度1lux，温度=25 2℃）中使用亮度计系统（测角仪系统和TOPCON BM-5）设备进行测量，测试单元应位于大约 在 θ 和 Φ 等于 0 的视角下，距 LCD 表面 50cm 的距离。 显示面上测量点的中心应保持固定。 测量前背光应工作 30 分钟。

The test of Optical specifications shall be measured in a dark room (ambient luminance 1lux and temperature = 25 2℃) with the equipment of Luminance meter system (Goniometer system and TOPCON BM-5) and test unit shall be located at an approximate distance 50cm from the LCD surface at a viewing angle of θ and Φ equal to 0 . The center of the measuring spot on the Display surface shall stay fixed. The backlight should be operating for 30 minutes prior to measurement.

光学规格表

Optical Specifications Table

参数 Parameter		标号 Symbol	条件 Condition	最小值 Min.	典型值 Typ.	最大值 Max.	单位 Unit	备注 Remark
视角范围 Viewing Angle Range	水平 Horizontal	Θ左/L	CR>10	-	80	-	Deg.	Note 1
		Θ右/R		-	80	-	Deg.	
	垂直 Vertical	Θ上/U		-	80	-	Deg.	
		Θ下/D		-	80	-	Deg.	
对比度 Contrast ratio		CR	Θ = 0°	600	800	-	-	Note2
色域 Color Gamut		CG	CIE1931	55	60	-	%	
白色色度 White Chromaticity		Wx	Θ = 0°	-0.03	0.296	+0.03	-	Note4 (Based on C Light)
		Wy			0.325		-	
色彩还原 Reproduction of color	红 Red	Rx			0.648		-	
		Ry			0.329		-	
	绿 Green	Gx			0.279		-	
		Gy			0.550		-	
	蓝 Blue	Gy			0.134		-	
		By			0.123		-	
响应时间（上升 + 下降） Response Time (Rising + Falling)		Tr＋Tf	Θ = 0° Ta= 25℃	-	35	45	ms	Note5

注释 Note:

1. 视角是对比度大于10的角度。视角确定为相对于光轴的水平或3、9点钟方向和垂直或6、12点钟方向 垂直于 LCD 表面（见图 1）。

Viewing angle is the angle at which the contrast ratio is greater than 10. The viewing angles are determined for the horizontal or 3, 9 o’ clock direction and the vertical or 6, 12 o’ clock direction with respect to the optical axis which is normal to the LCD surface (see FIGURE 1).

2. 对比度测量应在 θ= 0 的视角和 LCD 表面的中心进行。 亮度测量时，视场中的所有像素首先设置为白色，然后设置为暗（黑色）状态。（参见图 1）亮度对比度（CR）是通过数学定义的。

Contrast measurements shall be made at viewing angle of Θ= 0 and at the center of the LCD surface. Luminance shall be measured with all pixels in the view field set first to white, then to the dark (black) state . (see FIGUR 1) Luminance Contrast Ratio (CR) is defined mathematically.

$$CR = \frac{\text{Luminance when displaying a white raster}}{\text{Luminance when displaying a black raster}}$$

3. 透射率是没有 APF 和没有 CG 的值。

Transmittance is the Value without APF and without CG.

4. 上表中规定的色度坐标应由所有像素首先测量的光谱数据计算为红色、绿色、蓝色和白色。 测量应在面板的中心进行。

The color chromaticity coordinates specified in the above table shall be calculated from the spectral data measured with all pixels first in red, green, blue and white. Measurements shall be made at the center of the panel.

5. 电光响应时间测量应如图 2 所示，通过打开和关闭“数据”输入信号来进行。 亮度从10%变化到90%所需的时间是Tr，90%到10%是Tf。

The electro-optical response time measurements shall be made as FIGURE 2 by switching the “data” input signal ON and OFF. The times needed for the luminance to change from 10% to 90% is Tr, and 90% to 10% is Tf.

Figure1 Measurement Set Up

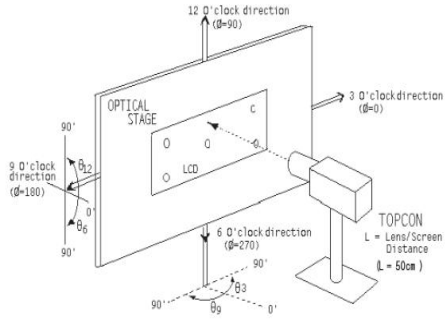

图 1

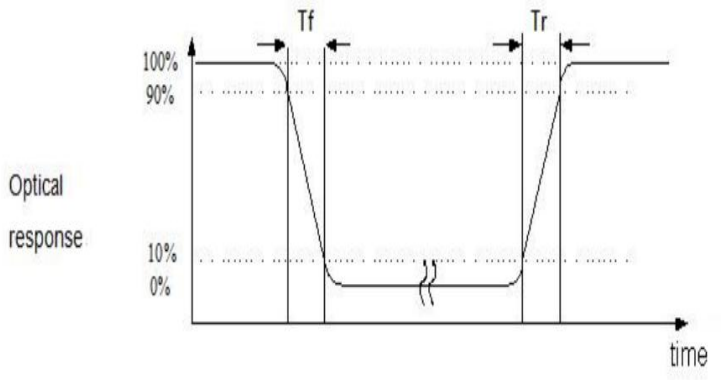

图 2

六、交流特性 AC characteristic

6.1. RGB接口的系统总线时序 System bus timing for RGB interface

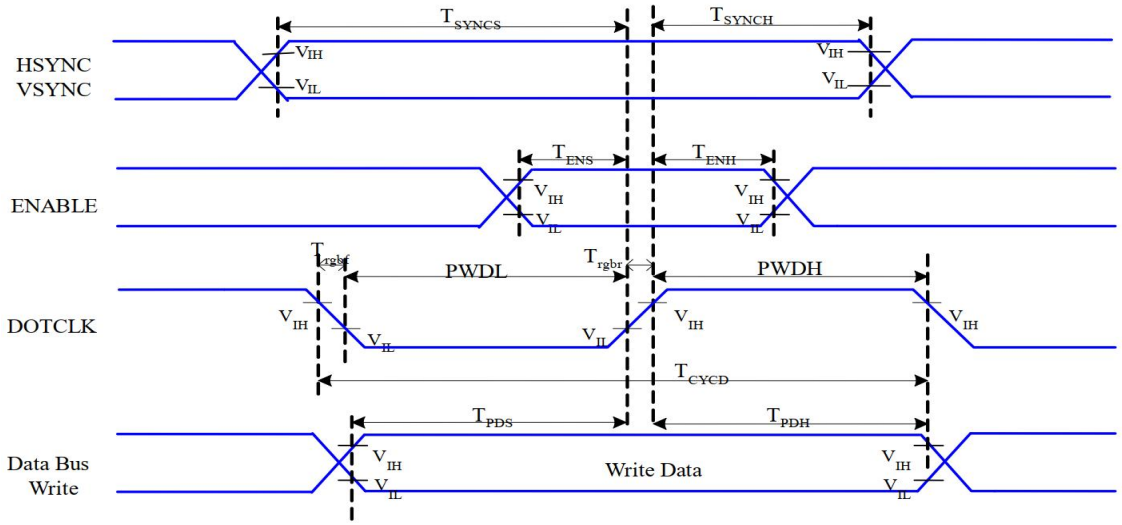

RGB Interface Timing Characteristics

Signal	Symbol	Parameter	MIN	MAX	Unit	Description
HSYNC, VSYNC	T_{SYNCS}	VSYNC, HSYNC Setup Time	5	-	ns	
ENABLE	T_{ENS}	Enable Setup Time	5	-	ns	
	T_{ENH}	Enable Hold Time	5	-	ns	
DOTCLK	PWDH	DOTCLK High-level Pulse Width	15	-	ns	
	PWDL	DOTCLK Low-level Pulse Width	15	-	ns	
	T_{CYCD}	DOTCLK Cycle Time	33	-	ns	
	Trghr, Trghf	DOTCLK Rise/Fall time	-	15	ns	
DB	T_{PDS}	PD Data Setup Time	5	-	ns	
	T_{PDH}	PD Data Hold Time	5	-	ns	

RGB Interface Characteristics

6.2. 串行接口特性（3线串行）Serial Interface Characteristics (3-line serial)

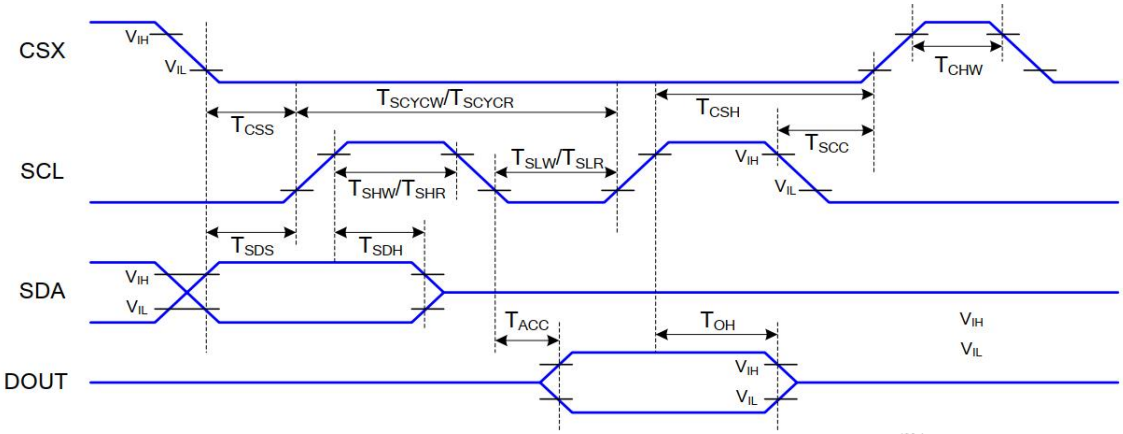

3-line serial Interface Timing Characteristics

Signal	Symbol	Parameter	Min	Max	Unit	Description
CSX	T_{CSS}	Chip select setup time (write)	15		ns	
	T_{CSH}	Chip select hold time (write)	15		ns	
	T_{CSS}	Chip select setup time (read)	60		ns	
	T_{SCC}	Chip select hold time (read)	60		ns	
	T_{CHW}	Chip select “H” pulse width	40		ns	
SCL	T_{SCYCW}	Serial clock cycle (Write)	66		ns	
	T_{SHW}	SCL “H” pulse width (Write)	15		ns	
	T_{SLW}	SCL “L” pulse width (Write)	15		ns	
	T_{SCYCR}	Serial clock cycle (Read)	150		ns	
	T_{SHR}	SCL “H” pulse width (Read)	60		ns	
	T_{SLR}	SCL “L” pulse width (Read)	60		ns	
SDA (DIN)	T_{SDS}	Data setup time	10		ns	
	T_{SDH}	Data hold time	10		ns	

3-line serial Interface Characteristics

6.3. 开机上电&关机下电顺序 Power-on/off sequence

VCI 可以以任何顺序应用。
VCI 可以按任何顺序断电。
断电期间，如果 LCD 处于睡眠模式，则 VCI 必须在释放 RESX 后至少 120 秒断电。
在断电期间，如果 LCD 处于睡眠模式，VCI 可以在释放 RESX 后至少 0 秒断电。
CSX 可以在任何时间应用，也可以永久接地。RESX 优先于 CSX

VCI can be applied in any order.
VCI can be power down in any order.
During power off, if LCD is in the Sleep Out mode, VCI must be powered down minimum 120msec after RESX has been released.
During power off, if LCD is in the Sleep In mode, VCI can be powered down minimum 0msec after RESX has been released.
CSX can be applied at any timing or can be permanently grounded. RESX has priority over CSX

注 1：如果不符合电源顺序，显示模块不会损坏。
注 2：在电源开/关序列期间，显示面板上不会出现异常的可见效果。
注 3：在通电序列结束和收到睡眠命令之前，显示器上不会出现异常可见效果。也在接收睡眠命令和电源关闭序列之间。
注 4：如果主机在以下顺序中定义的通电顺序期间没有保持 RESX 线路稳定，则有必要在主机开机序列完成后应用硬件重置（RESX）以确保正确操作。否则无法保证功能。
注 5:将 VDD 和 VDDI 在 FPC 接在一起称为 VCI

Note 1: There will be no damage to the display module if the power sequences are not met.
Note 2: There will be no abnormal visible effects on the display panel during the Power On/Off Sequences.
Note 3: There will be no abnormal visible effects on the display between end of Power On Sequence and before receiving Sleep Out command. Also between receiving Sleep In command and Power Off Sequence.
Note 4: If RESX line is not held stable by host during Power On Sequence as defined in the sequence below, then it will be necessary to apply a Hardware Reset (RESX) after Host Power On Sequence is complete to ensure correct operation. Otherwise function is not guaranteed.
Note 5: Connecting VDD and VDDI together on FPC is called VCI

电源开/关顺序如下图所示

The power on/off sequence is illustrated below

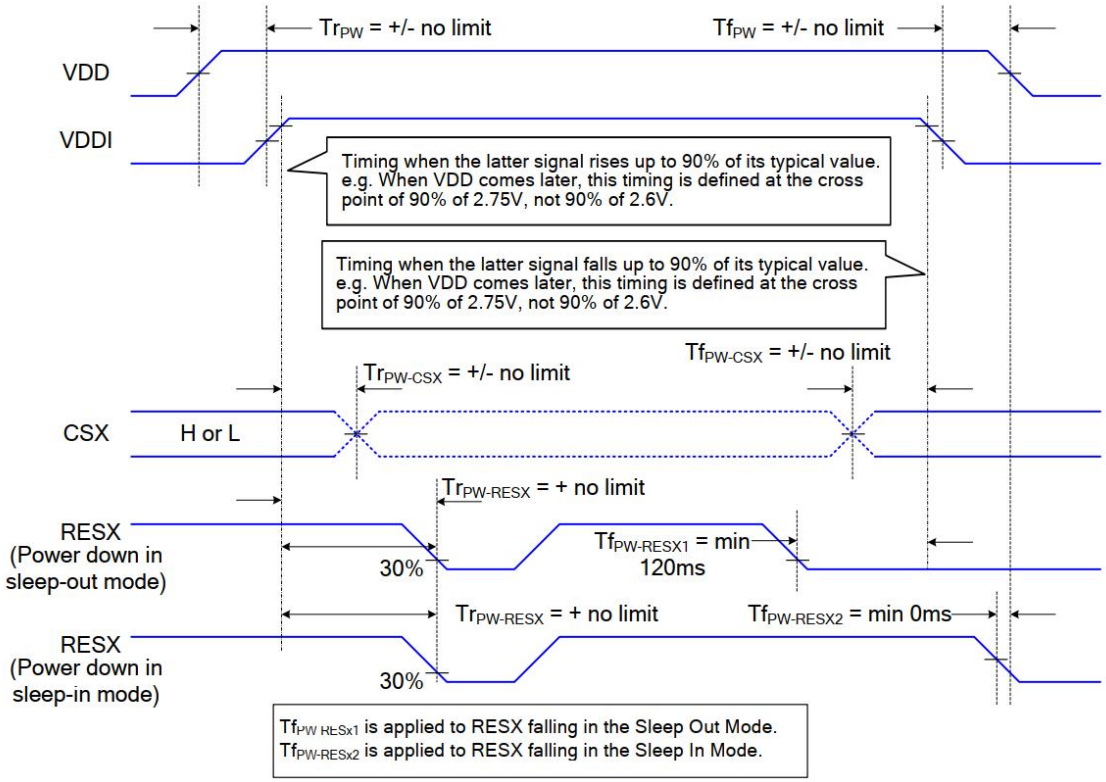

6.3.1. 不受控制的断电 Uncontrolled Power OFF

不受控断电是指在没有受控断电顺序的情况下取出电池的情况。它既不会损坏模块，也不会损坏主机接口。

如果发生不受控制的断电，显示器将变为空白，显示器上不会有任何可见的效果（空白显示），并保持空白，直到“通电顺序”通电。

The uncontrolled power-off means a situation which removed a battery without the controlled power off sequence. It will neither damage the module or the host interface.

If uncontrolled power-off happened, the display will go blank and there will not any visible effect on the display (blank display) and remains blank until “Power On Sequence” powers it up.

6.4. 重置输入定时 Reset input timings

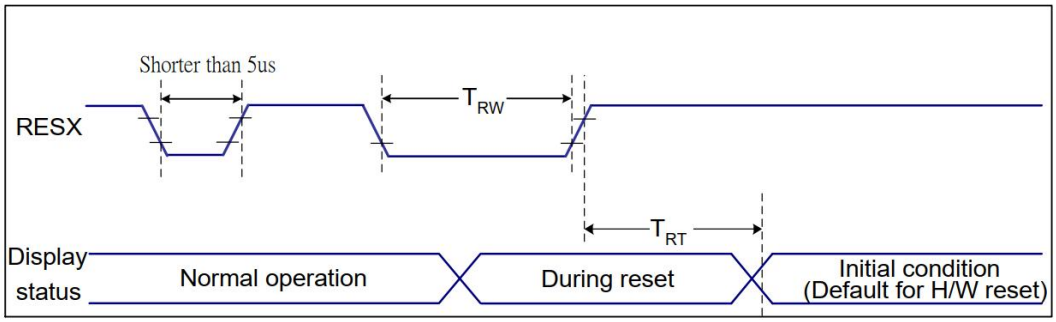

Related Pins	Symbol	Parameter	MIN	MAX	Unit
RESX	TRW	Reset pulse duration	10	-	us
	TRT	Reset cancel	-	5 (Note 1, 5)	ms
				120(Note 1, 6, 7)	ms

Reset Timing

Notes:

1. The reset cancel includes also required time for loading ID bytes, VCOM setting and other settings from NVM (or similar device) to registers. This loading is done every time when there is HW reset cancel time (tRT) within 5 ms after a rising edge of RESX.

2. Spike due to an electrostatic discharge on RESX line does not cause irregular system reset according to the table below:

RESX Pulse	Action
Shorter than 5us	Reset Rejected
Longer than 9us	Reset
Between 5us and 9us	Reset starts

3. During the Resetting period, the display will be blanked (The display is entering blanking sequence, which maximum time is 120 ms, when Reset Starts in Sleep Out –mode. The display remains the blank state in Sleep In –mode.) and then return to Default condition for Hardware Reset.

4. Spike Rejection also applies during a valid reset pulse as shown below:

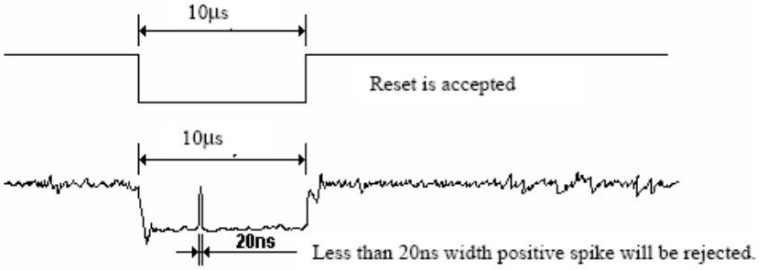

5. When Reset applied during Sleep In Mode.

6. When Reset applied during Sleep Out Mode.

7. It is necessary to wait 5msec after releasing RESX before sending commands. Also Sleep Out command cannot be sent for 120msec.

七、通信接口 Communication Interface

1. 串行接口（SPI）Serial Interface (SPI)

(1) 3线串行接口命令写入模式 3-lines serial interface Command write mode

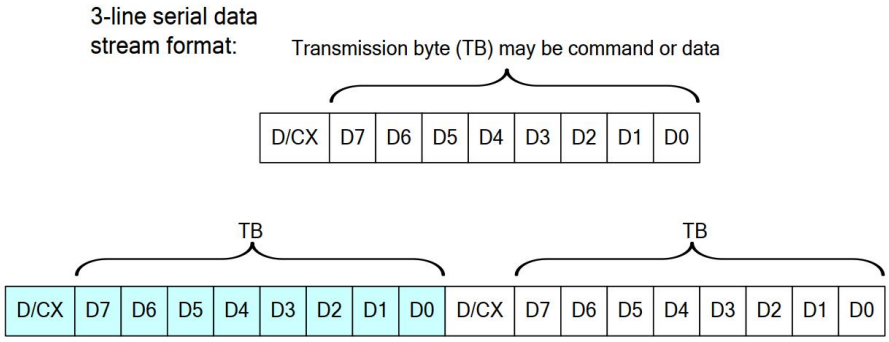

Serial interface data stream format

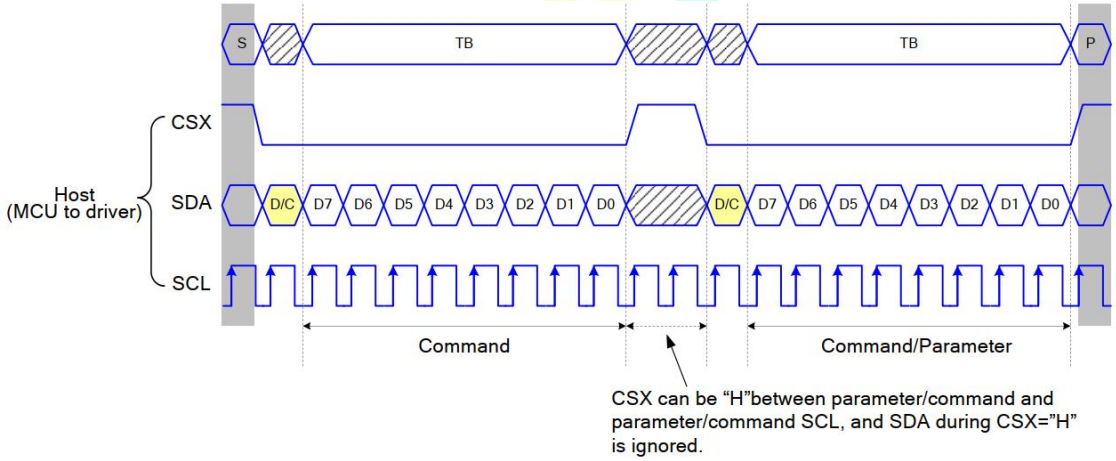

3-line serial interface write protocol
(write to register with control bit in transmission)

(2) 3线串行接口读取功能 3-lines serial interface Read function

3-line serial protocol (for RDID1/RDID2/RDID3/0Ah/0Bh/0Ch/0Dh/0Eh/0Fh command: 8-bit read):

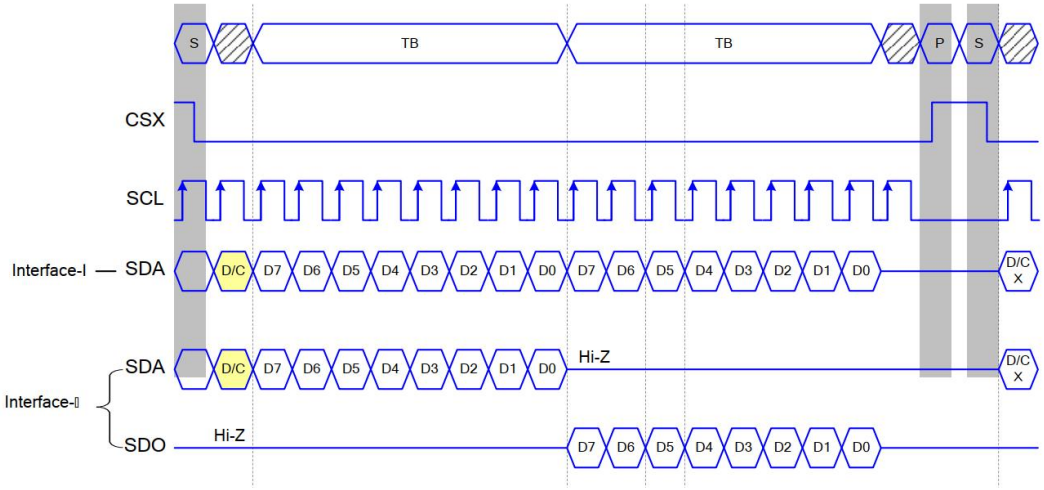

3-line serial protocol (for RDDID command: 24-bit read)

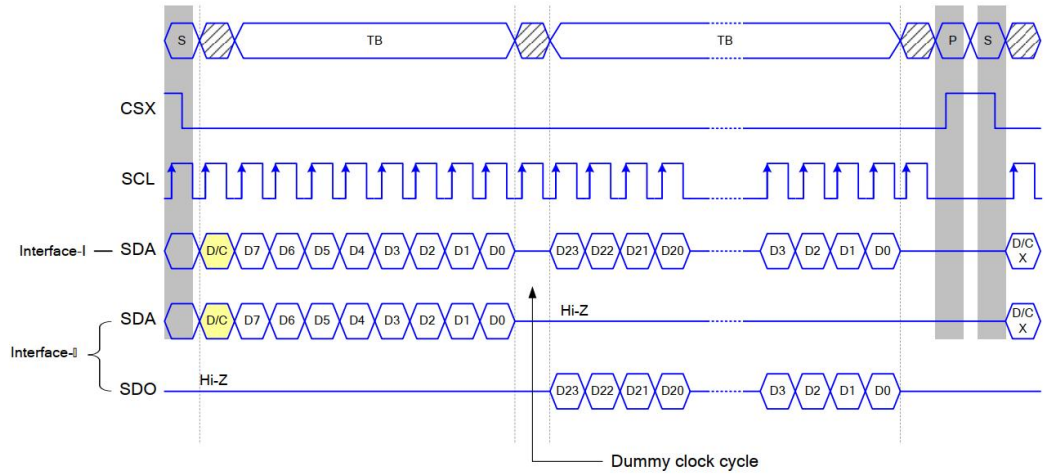

3-line Serial Protocol (for RDDST command: 32-bit read)

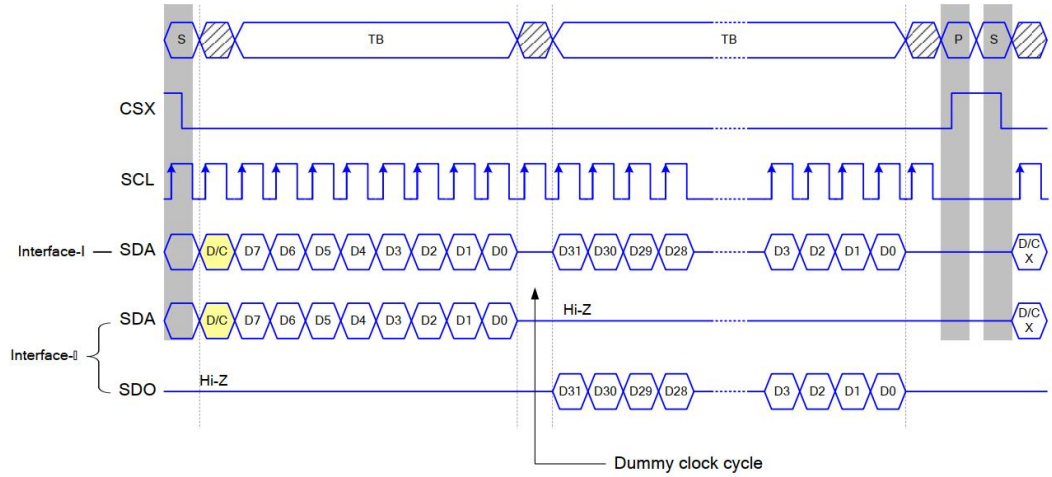

(3) 16位串行接口写入模式 16 bit Serial Interface Write Mode

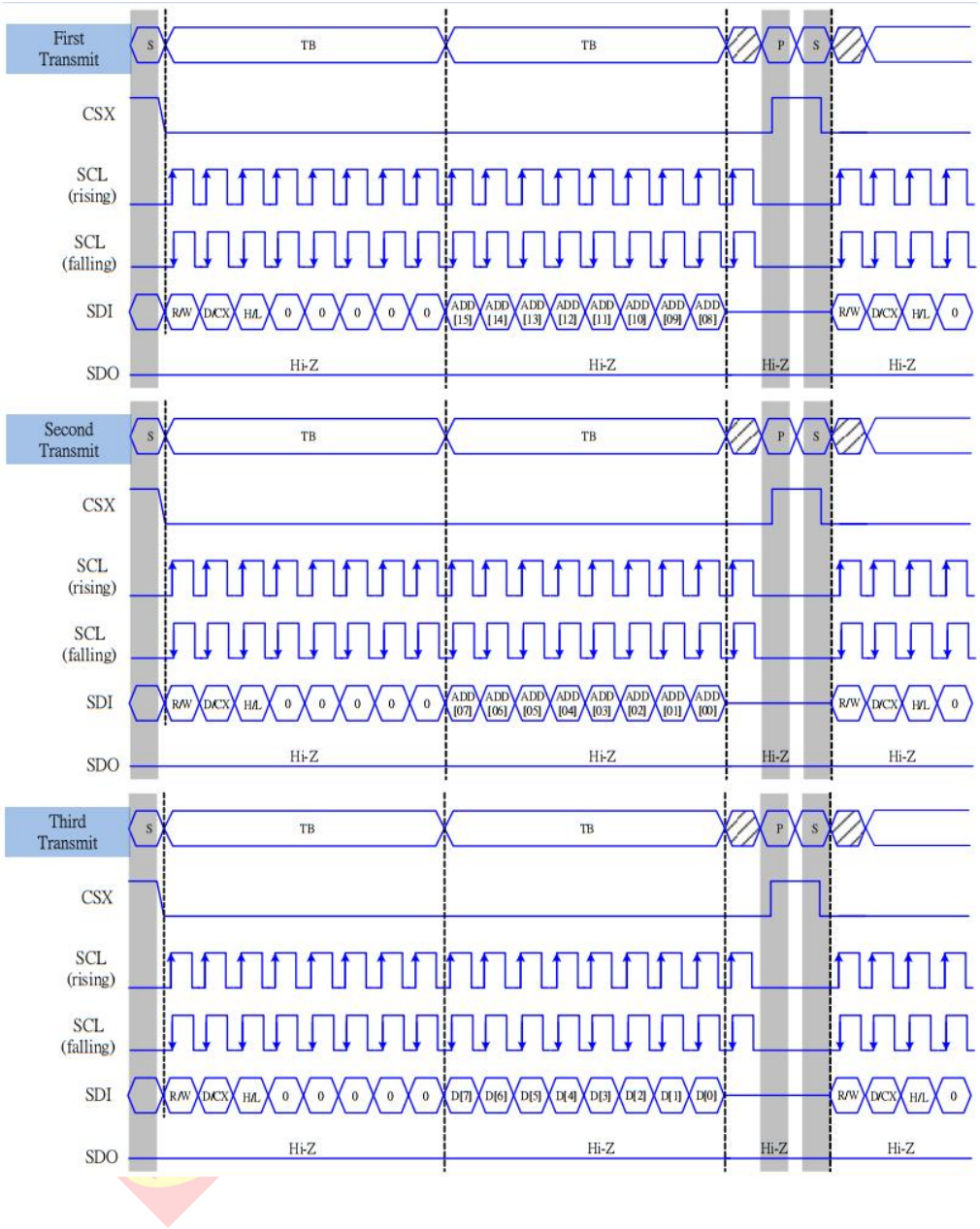

serial 16 bit interface write mode

(4) 16位串行接口读取功能 16 bit Serial Interface Read function

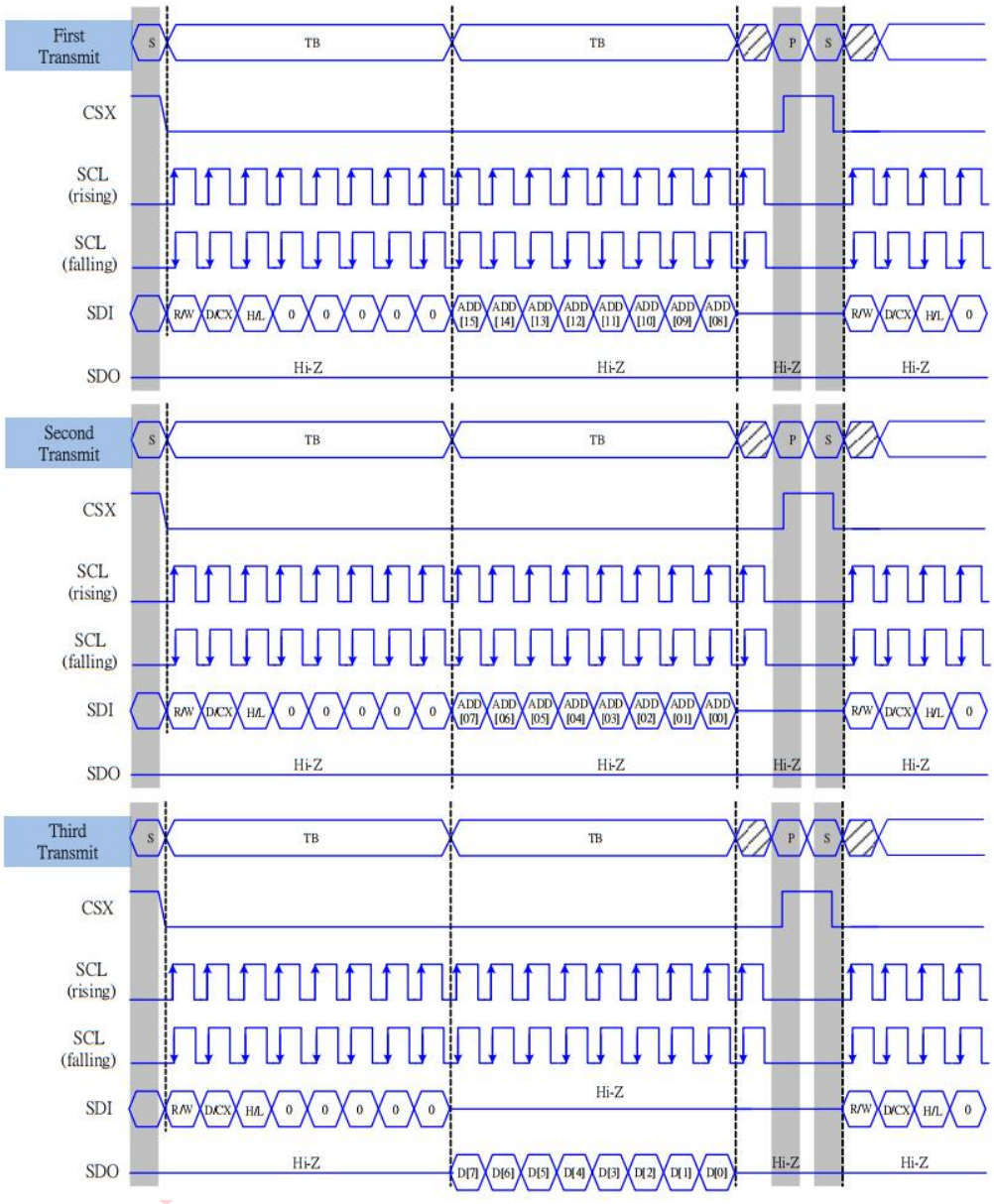

serial 16 bit interface read mode

2. RGB 接口 RGB Interface

ST7701S 支持 RGB 接口模式 1 和模式 2。通过命令 2 中的设置选择模式 1 和模式 2 功能。

在 RGB 模式 1 中，当 DE 为高状态时，通过 PCLK 和视频数据总线（D[23:0]）将数据写入行缓冲区。外部时钟（PCLK、VS 和 HS）用于内部显示时钟。因此，控制器必须始终将 PCLK、VS 和 HS 信号传输到 ST7701S。

在 RGB 模式 2 中，Vsync 的后廊由 RGB PORCTR 命令的 VBP[7:0]定义。Hsync 的后门由 RGB PORCTR 命令的 HBP[7:0]定义。Vsync 的前廊由 RGB PORCTR 命令的 VFP[7:0]定义。Hsync 的前廊由 RGB PORCTR 命令的 HFP[7:0]定义。

The ST7701S support RGB interface Mode 1 and Mode 2. The Mode 1 and Mode 2 function is select by setting in the Command 2.

In RGB Mode 1, writing data to line buffer is done by PCLK and Video Data Bus (D[23:0]), when DE is high state. The external clocks (PCLK, VS and HS) are used for internal displaying clock. So, controller must always transfer PCLK, VS and HS signal to ST7701S.

In RGB Mode 2, back porch of Vsync is defined by VBP[7:0] of RGB PORCTR command. And back porch of Hsync is defined by HBP[7:0] of RGB PORCTR command. Front porch of Vsync is defined by VFP[7:0] of RGB PORCTR command. And front porch of Hsync is defined by HFP[7:0] of RGB PORCTR command.

RGB I/F Mode	PCLK	DE	VS	HS	DB[23:0]	Register for Blanking Porch setting
RGB Mode 1	Used	Used	Used	Used	Used	Not Used
RGB Mode 2	Used	Not Used	Used	Used	Used	Used

(1) RGB 颜色格式 RGB Color Format

Command2_BK0：CD00H

Pad name	24 bits configuration VIPF[3:0]=0111	18 bits configuration VIPF[3:0]=0110		16 bits configuration VIPF[3:0]=0101
		MDT=0	MDT=1	
DB[23]	R7	Not used	Not used	Not used
DB[22]	R6	Not used	Not used	Not used
DB[21]	R5	R5	Not used	Not used
DB[20]	R4	R4	Not used	R4
DB[19]	R3	R3	Not used	R3
DB[18]	R2	R2	Not used	R2
DB[17]	R1	R1	R5	R1
DB[16]	R0	R0	R4	R0
DB[15]	G7	Not used	R3	Not used
DB[14]	G6	Not used	R2	Not used
DB[13]	G5	G5	R1	G5
DB[12]	G4	G4	R0	G4
DB[11]	G3	G3	G5	G3
DB[10]	G2	G2	G4	G2
DB[09]	G1	G1	G3	G1
DB[08]	G0	G0	G2	G0
DB[07]	B7	Not used	G1	Not used
DB[06]	B6	Not used	G0	Not used
DB[05]	B5	B5	B5	Not used
DB[04]	B4	B4	B4	B4
DB[03]	B3	B3	B3	B3
DB[02]	B2	B2	B2	B2
DB[01]	B1	B1	B1	B1
DB[00]	B0	B0	B0	B0

RGB 接口的接口颜色映射

The interface color mapping of RGB interface

(2) RGB 接口定义 RGB Interface Definition

通过 RGB 接口的显示操作与 VSYNC、HSYNC 和 PCLK 信号同步。通过使用窗口地址功能，数据只能在低功耗的指定区域内写入。后廊和前廊用于设置 RGB 接口定时

The display operation via the RGB interface is synchronized with the VSYNC, HSYNC, and PCLK signals. The data can be written only within the specified area with low power consumption by using window address function. The back porch and front porch are used to set the RGB interface timing。

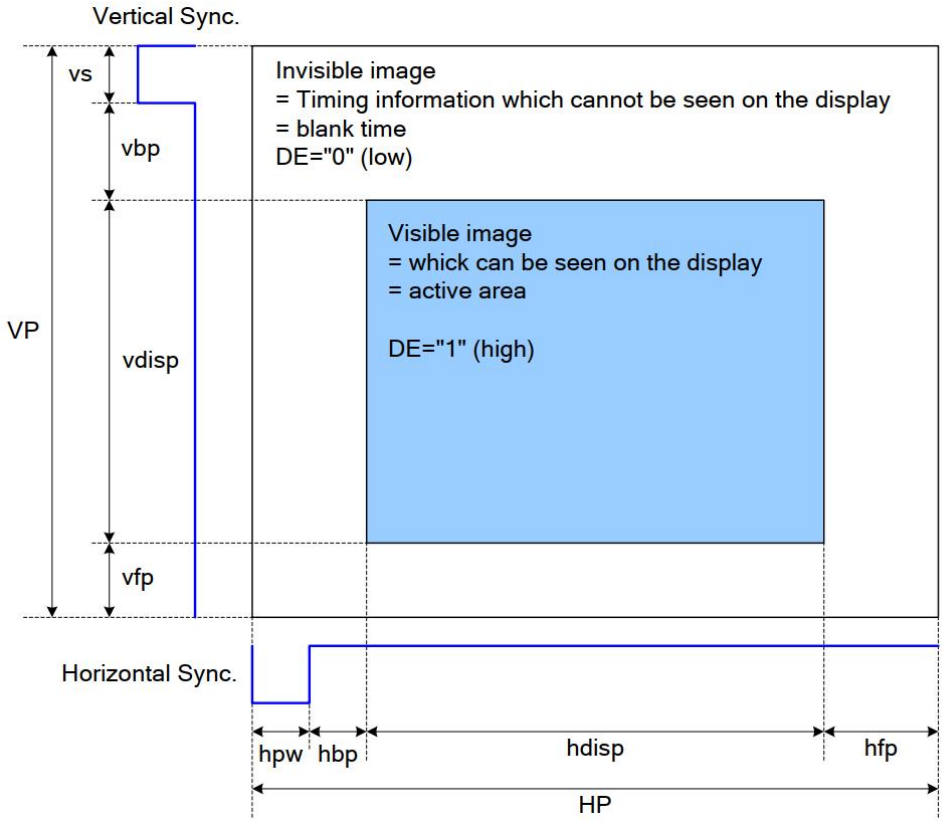

Access Area by RGB Interface

Please refer to the following table for the setting limitation of RGB interface signals.

Parameter	Symbol	Min.	Typ.	Max.	Unit
Horizontal Sync. Width	hpw	1	-	255	Clock
Horizontal Sync. Back Porch	hbp	1	--	255	Clock
Horizontal Sync. Front Porch	hfp	1	--	-	Clock
Vertical Sync. Width	vs	1	--	254	Line
Vertical Sync. Back Porch	vbp	1	--	254	Line
Vertical Sync. Front Porch	vfp	2	--	--	Line

Note:

1. *Typical value are related to the setting frame rate is 60Hz..*

(3) RGB 接口模式选择 RGB Interface Mode Selection

ST7701S 支持两种 RGB 接口，DE 模式和 HV 模式。下表使用命令 C3h 选择 RGB 接口模式。

ST7701S supports two kinds of RGB interface, DE mode and HV mode. The table shown below uses command C3h to select RGB interface mode.

DE/Sync	RGB Mode
0	DE mode
1	HV mode

(4) RGB 接口时序 RGB Interface Timing

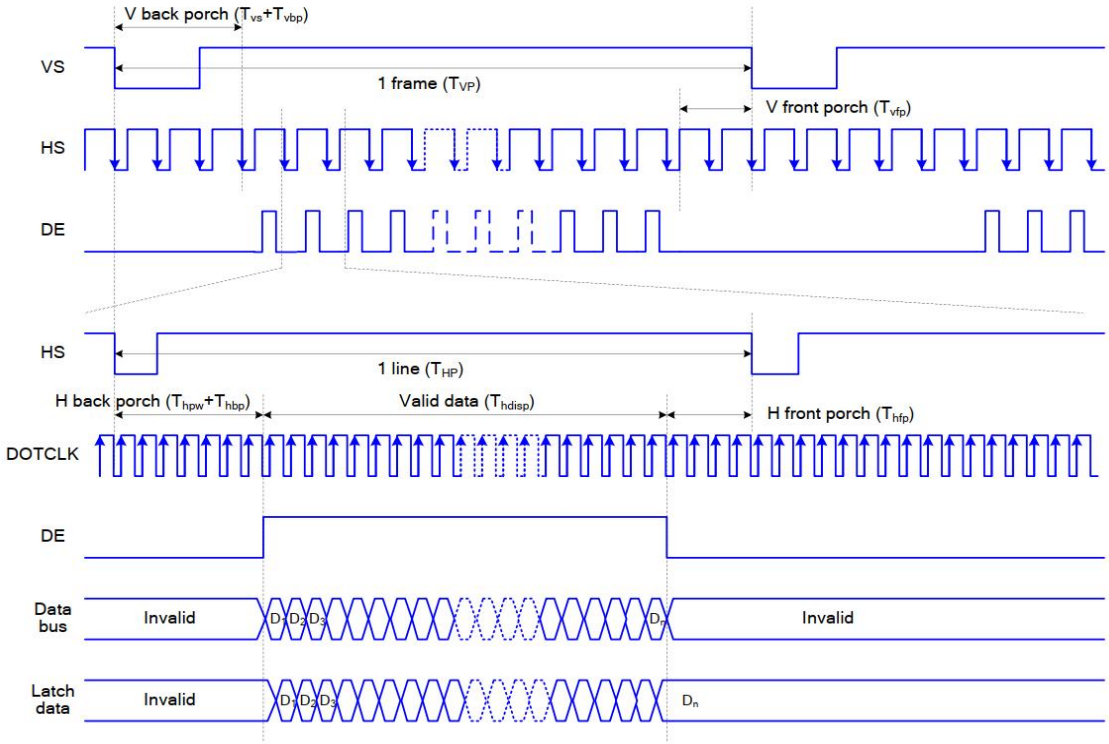

注意：在这种模式下，主机中的前廊和后廊的设置必须与 IC 中的设置相匹配。

Note: The setting of front porch and back porch in host must match that in IC as this mode.

Timing Chart of Signals in RGB Interface DE Mode

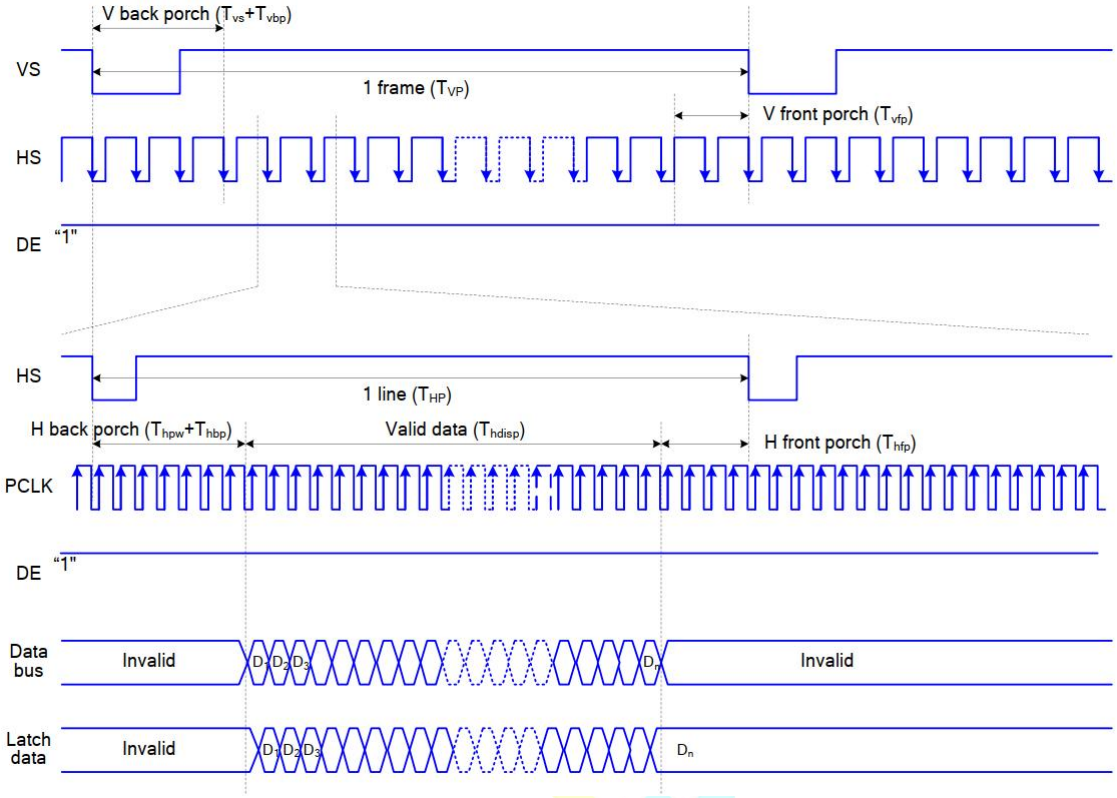

Timing Chart of Signals in RGB Interface HV Mode

八、可靠性测试 RELIABILITY TEST

8-1 温度和湿度 Temperature and Humidity

测试项目 TEST ITEMS	条件 CONDITIONS	注释 NOTE
高温储存 High Temperature Storage	Ta=+85 ℃, 120hrs	
低温储存 Low Temperature Storage	Ta=-30 ℃, 120hrs	
高温运行试验 High Temperature Operation	Ta=+85℃, 120hrs	
低温运行试验 Low Temperature Operation	Ta=-30 ℃, 120hrs	
高温高湿（运行测试） High Temperature and High Humidity (Operating)	Ta=+60 ℃, 90%RH, 120hrs	

注释 Note:

1. 液晶驱动电压。由于液晶材料的特性，该电压随环境温度而变化。

Liquid Crystal driving voltage。Due to the characteristics of LC Material, this voltage varies with environmental temperature.

2. 温度和相对湿度范围如下图所示。湿球温度最高应为39℃。并且没有冷凝水。

Temperature and relative humidity range are shown in the figure below.Wet bulb temperature should be 39 ℃ max. and no condensation of water.

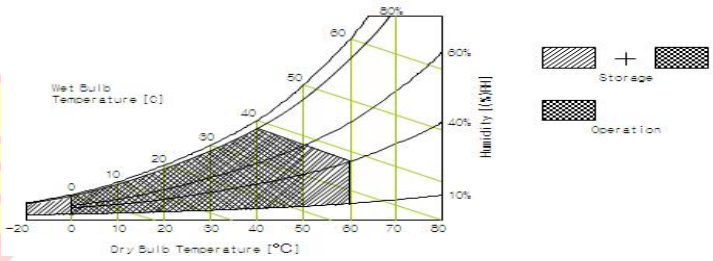

3. 产品经可靠性测试后，仅保证功能正常，无任何致命缺陷（不显示、线路缺陷、显示异常等）。

After the reliability test, the product only guarantee function normally without any fatal defect(non-display, line defect, abormal display etc).

4. 所有显示判断均在面板温度恢复到室温2小时后进行

All display judgments are made after the panel temperature returns to room temperature for 2 hours

5. Ta：环境温度

Ta：Ambient temperature

8-2 冲击和振动 Shock and Vibration

测试项目 TEST ITEMS	条件 CONDITIONS
包装冲击(非操作) Packing Shock (Non-Operation)	● Shock level:980m/s^2 ● Waveform:1/2 Sine wave,6msec ● ±X, ±Y ±Z,each axis 1 times
包装振动(非操作) Packing Vibration (Non-Operation)	● Frequency range:8-33.3HZ ● Stoke:1.0mm ● Sweep: 10Hz-50Hz ● x,y,z 2 hours for each direction

8-3 静电放电测试 Electrostatic Discharge

测试项目 TEST ITEMS	条件 CONDITIONS
ESD (Non-operation)	150pF,330Ω, Contact±4KV,Air :±8KV.Note 1
	200pF,0Ω, ±200V Contact test.Note 2

测量点 Measure Point:

1. LCD玻璃和金属边框
   LCD glass and metal bezel
2. 连接器引脚
   IF connector pins

九、处理和注意事项 HANDDLING & CAUTIONS

9-1 操作注意事项 Caution For Operation

♦由于液晶模组是玻璃材质，请勿对其施加强烈的机械冲击或静载荷。请小心搬运，因为冲击、振动和粗心的搬运可能会严重影响产品。如果从高处坠落或受到强烈冲击 ，玻璃可能碎了。

Since the LCM is made of glass, do not apply strong mechanical impact or static load onto it.Handling with care since shock, vibration, and careless handling may seriously affect the product.If it falls from a high place or receives a strong shock, the glass maybe broken.

♦在规定的电压限制内驱动 LCM 是必不可少的，因为高于限制的电压会导致 LCM 的寿命缩短。 由直流引起的电化学反应会导致 LCM 出现不良劣化，因此应避免使用直流驱动。

It is indispensable to drive the LCM within the specified voltage limit since the higher voltage than the limit causes LCM's life shorter. An electro-chemical reaction due to DC causes undesirable deterioration of the LCM so that the use of DC drive should avoid.

♦请勿在电源开启时将 LCM 连接到系统或从系统断开连接。

Do not connect or disconnect the LCM to or from the system when power is on.

♦切勿在高温高湿的异常条件下使用 LCM。

Never use the LCM under abnormal conditions of high temperature and high humidity.

♦当暴露于剧烈的温度波动（热到冷或冷到热）时，LCM可能会受到影响； 具体来说，从冷到热的剧烈温度波动会在 LCM 表面产生露水，这可能会影响 LCM 上偏振片的运行。

When expose to drastic fluctuation of temperature(hot to cold or cold to hot), the LCM may be affected; specifically, drastic temperature fluctuation from cold to hot, produces dew on the LCM's surface which may affect the operation of the polarizer on the LCM.

♦在低于工作温度范围的温度下，响应时间将极度延迟，另一方面，在高于其工作范围的温度下，LCM 可能会变黑。 然而，这些现象并不意味着 LCM 出现故障或故障。 一旦温度恢复到正常运行的推荐温度范围，LCM 将恢复正常运行。

Response time will be extremely delay at lower temperature than the operating temperature range and on the other hand LCM may turn black at temperature above its operational range. However those phenomenon do not mean malfunction or out of order with the LCM. The LCM will revert to normal operation once the temperature returns to the recommended temperature range for normal operation.

♦为防止LCD产生图像残留，在使用常黑面板时不要长时间显示固定图案。 如果LCD需要显示固定图案，建议时间少于 2 分钟或者更短的时间内刷新显示内容一次或多次。强烈建议使用黑色图像或移动图像作为屏幕保护程序。

In order to prevent the LCD from producing image retention, do not display a fixed pattern for a long time when using a normally black panel. If the LCD needs to display a fixed pattern, it is recommended to refresh the display one or more times in less

than 2 minutes or less. It is strongly recommended to use a black image or moving image as a screen saver.

♦强烈的光照会导致 LCD 偏光片和彩色滤光片退化。 不准在强光或高温高湿下长期存放或直接运行。

Strong sunlight can cause LCD polarizers and color filters to degrade. Long-term storage or direct operation under strong light or high temperature and humidity is not allowed.

9-2 防静电措施 Caution Against Static Charge

♦LCM 使用 C-MOS LSI 驱动器，因此建议客户将任何未使用的输入端连接到 Vdd 或 Vss，上电前不要输入任何信号，并将您的身体、工作/装配区、装配设备接地 防止静电。

The LCM use C-MOS LSI drivers, so customers are recommended that any unused input terminal would be connected to Vdd or Vss, do not input any signals before power is turn on, and ground you body, work/assembly area, assembly equipments to protect against static electricity.

♦缓慢去除保护膜，保持去除方向与面板表面不垂直约 30 度，如有可能，在离子风机等 ESD 控制装置下，工作室内湿度应保持在 50%RH 以上，以减少静电风险

Remove the protective film slowly, keeping the removing direction approximate 30-degree not vertical from panel surface, if possible, under ESD control device like ion blower, and the humidity of working room should be kept over 50%RH to reduce the risk of static charge.

♦避免使用合成纤维制成的工作服。 我们推荐棉质衣服或其他经过导电处理的纤维。

Avoid the use work clothing made of synthetic fibers. We recommend cotton clothing or other conductivity-treated fibers.

♦在处理 LCM 时，请戴上不带电材料的手套。 对地导电手腕和对地导电鞋是必需的

In handling the LCM, wear non-charged material gloves. And the conducting wrist to the earth and the conducting shoes to the earth are necessary

十、初始化代码 Initialization code

说明：这些参数值仅供参考，可能并不完全适用于所有软件平台，
请根据您使用的平台优化参数。
Description : These parameter values are for reference only and may not be fully applicable to all software platforms, please optimise the parameters according to the platform you are using.

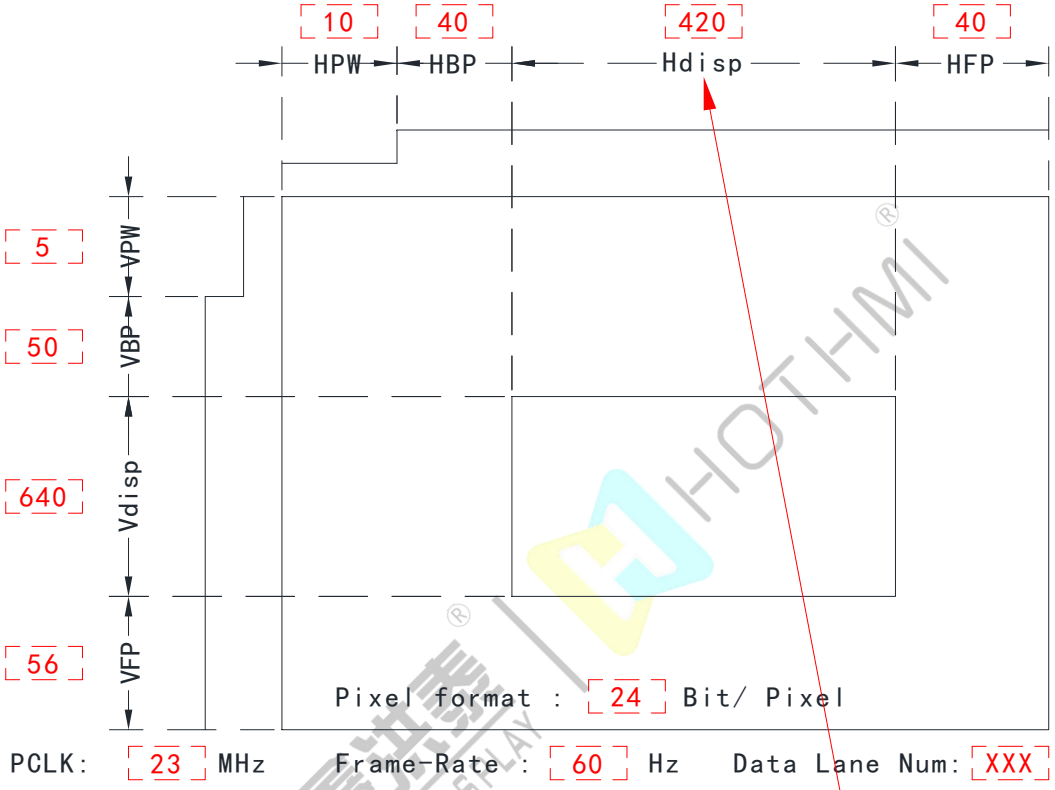

实际显示为360像素，左侧没有显示的60像素插入黑色
The actual display is 360 pixels, and the 60 pixels that are not displayed on the left are inserted in black

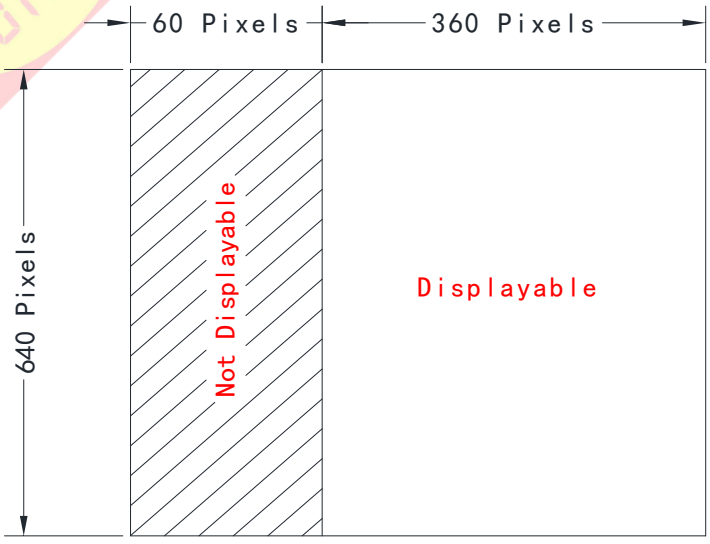

```
Void Panel_Initial_code(void)
{
//=================上电操作顺序 Power on operation sequence================//
Set_STBYB(0);// GPIO2  SET STBYB low
Set_POWER(1,0,0,0);//1.8V ON, 2.8V OFF, 5V OFF, BL OFF
Delay(150);
Set_POWER(1,1,1,0);//1.8V ON, 2.8V ON, 5V ON, BL OFF
Delay(150);
Set_RESET(1);//MIPI RESET 1, LCD RESET 1
Delay(200);
Set_RESET(0);//MIPI RESET 0, LCD RESET 0
Delay(100);
Set_RESET(1);//MIPI RESET 1, LCD RESET 1
Delay(100);
//=====================初始化代码 initialization code==================//
SPI_WriteComm(0x11);
Delay(120);
SPI_WriteComm(0xFF);
SPI_WriteData(0x77);
SPI_WriteData(0x01);
SPI_WriteData(0x00);
SPI_WriteData(0x00);
SPI_WriteData(0x10);
SPI_WriteComm(0xC0);
SPI_WriteData(0x4F);
SPI_WriteData(0x00);
SPI_WriteComm(0xC1);
SPI_WriteData(0x07);
SPI_WriteData(0x02);
SPI_WriteComm(0xC2);
SPI_WriteData(0x31);
SPI_WriteData(0x05);
SPI_WriteComm(0xB0);
SPI_WriteData(0x00);
SPI_WriteData(0x0A);
SPI_WriteData(0x11);
SPI_WriteData(0x0C);
SPI_WriteData(0x10);
SPI_WriteData(0x05);
SPI_WriteData(0x00);
```

```
SPI_WriteData(0x08);
SPI_WriteData(0x08);
SPI_WriteData(0x1F);
SPI_WriteData(0x07);
SPI_WriteData(0x13);
SPI_WriteData(0x10);
SPI_WriteData(0xA9);
SPI_WriteData(0x30);
SPI_WriteData(0x18);
SPI_WriteComm(0xB1);
SPI_WriteData(0x00);
SPI_WriteData(0x0B);
SPI_WriteData(0x11);
SPI_WriteData(0x0D);
SPI_WriteData(0x0F);
SPI_WriteData(0x05);
SPI_WriteData(0x02);
SPI_WriteData(0x07);
SPI_WriteData(0x06);
SPI_WriteData(0x20);
SPI_WriteData(0x05);
SPI_WriteData(0x15);
SPI_WriteData(0x13);
SPI_WriteData(0xA9);
SPI_WriteData(0x30);
SPI_WriteData(0x18);
SPI_WriteComm(0xFF);
SPI_WriteData(0x77);
SPI_WriteData(0x01);
SPI_WriteData(0x00);
SPI_WriteData(0x00);
SPI_WriteData(0x11);
SPI_WriteComm(0xB0);
SPI_WriteData(0x53);
SPI_WriteComm(0xB1);
SPI_WriteData(0x60);
SPI_WriteComm(0xB2);
SPI_WriteData(0x07);
SPI_WriteComm(0xB3);
SPI_WriteData(0x80);
```

```
SPI_WriteComm(0xB5);
SPI_WriteData(0x49);
SPI_WriteComm(0xB7);
SPI_WriteData(0x85);
SPI_WriteComm(0xB8);
SPI_WriteData(0x21);
SPI_WriteComm(0xC1);
SPI_WriteData(0x78);
SPI_WriteComm(0xC2);
SPI_WriteData(0x78);
Delay(100);
SPI_WriteComm(0xE0);
SPI_WriteData(0x00);
SPI_WriteData(0x00);
SPI_WriteData(0x02);
SPI_WriteComm(0xE1);
SPI_WriteData(0x03);
SPI_WriteData(0xA0);
SPI_WriteData(0x00);
SPI_WriteData(0x00);
SPI_WriteData(0x02);
SPI_WriteData(0xA0);
SPI_WriteData(0x00);
SPI_WriteData(0x00);
SPI_WriteData(0x00);
SPI_WriteData(0x33);
SPI_WriteData(0x33);
SPI_WriteComm(0xE2);
SPI_WriteData(0x22);
SPI_WriteData(0x22);
SPI_WriteData(0x33);
SPI_WriteData(0x33);
SPI_WriteData(0x88);
SPI_WriteData(0xA0);
SPI_WriteData(0x00);
SPI_WriteData(0x00);
SPI_WriteData(0x87);
SPI_WriteData(0xA0);
SPI_WriteData(0x00);
SPI_WriteData(0x00);
```

```
SPI_WriteComm(0xE3);
SPI_WriteData(0x00);
SPI_WriteData(0x00);
SPI_WriteData(0x22);
SPI_WriteData(0x22);
SPI_WriteComm(0xE4);
SPI_WriteData(0x44);
SPI_WriteData(0x44);
SPI_WriteComm(0xE5);
SPI_WriteData(0x04);
SPI_WriteData(0x84);
SPI_WriteData(0xA0);
SPI_WriteData(0xA0);
SPI_WriteData(0x06);
SPI_WriteData(0x86);
SPI_WriteData(0xA0);
SPI_WriteData(0xA0);
SPI_WriteData(0x08);
SPI_WriteData(0x88);
SPI_WriteData(0xA0);
SPI_WriteData(0xA0);
SPI_WriteData(0x0A);
SPI_WriteData(0x8A);
SPI_WriteData(0xA0);
SPI_WriteData(0xA0);
SPI_WriteComm(0xE6);
SPI_WriteData(0x00);
SPI_WriteData(0x00);
SPI_WriteData(0x22);
SPI_WriteData(0x22);
SPI_WriteComm(0xE7);
SPI_WriteData(0x44);
SPI_WriteData(0x44);
SPI_WriteComm(0xE8);
SPI_WriteData(0x03);
SPI_WriteData(0x83);
SPI_WriteData(0xA0);
SPI_WriteData(0xA0);
SPI_WriteData(0x05);
SPI_WriteData(0x85);
```

```
SPI_WriteData(0xA0);
SPI_WriteData(0xA0);
SPI_WriteData(0x07);
SPI_WriteData(0x87);
SPI_WriteData(0xA0);
SPI_WriteData(0xA0);
SPI_WriteData(0x09);
SPI_WriteData(0x89);
SPI_WriteData(0xA0);
SPI_WriteData(0xA0);
SPI_WriteComm(0xEB);
SPI_WriteData(0x00);
SPI_WriteData(0x01);
SPI_WriteData(0xE4);
SPI_WriteData(0xE4);
SPI_WriteData(0x88);
SPI_WriteData(0x00);
SPI_WriteData(0x40);
SPI_WriteComm(0xEC);
SPI_WriteData(0x3C);
SPI_WriteData(0x01);
SPI_WriteComm(0xED);
SPI_WriteData(0xAB);
SPI_WriteData(0x89);
SPI_WriteData(0x76);
SPI_WriteData(0x54);
SPI_WriteData(0x02);
SPI_WriteData(0xFF);
SPI_WriteData(0xFF);
SPI_WriteData(0xFF);
SPI_WriteData(0xFF);
SPI_WriteData(0xFF);
SPI_WriteData(0xFF);
SPI_WriteData(0x20);
SPI_WriteData(0x45);
SPI_WriteData(0x67);
SPI_WriteData(0x98);
SPI_WriteData(0xBA);
Delay(100);
SPI_WriteComm(0xFF);
```

```
SPI_WriteData(0x77);
SPI_WriteData(0x01);
SPI_WriteData(0x00);
SPI_WriteData(0x00);
SPI_WriteData(0x00);

//SPI_WriteComm(0x3A);
//SPI_WriteData(0x70);  //0x70=888;      0x60=666;    0x50=565

SPI_WriteComm(0x11);
Delay(120);

SPI_WriteComm(0x29);


Delay(150);
Set_STBYB(1);  // GPIO2  SET STBYB High
Set_POWER(1,1,1,1);//1.8V ON, 2.8V ON, 5V ON, BL ON
Delay(150);
}
```

MIPI 代码格式说明 Code Format Description

```
  SSD_SEND(0x01,0xCC,0x15,0x04,0x35);
```

参数 1（Parameter 1）： 0x00 DCS_Short_Write
0x01 DCS_Long_Write
0x10 Generic_Short_Write
0x11 Generic_Long_Write

参数 2（Parameter 2）：寄存器地址(Register Address)

参数 3 ～ N（Parameter 3 ～ N）：寄存器数据（Register Data)

```
    DCS_Short_Write_NP(0x11);
```

参数 1（Parameter 1）：寄存器地址，无数据（Register Address, no data)

文档修订记录

Document revision history :

版本 Version	日期 DATE	修改说明 Modify description	编辑 Editorial
0-0	2026-11-19	初次编制 First compilation.	R.L

- - 结束 - -

- - END - -